Ka7055b.sch-1 - Fri Mar 17 18:03:09 2006

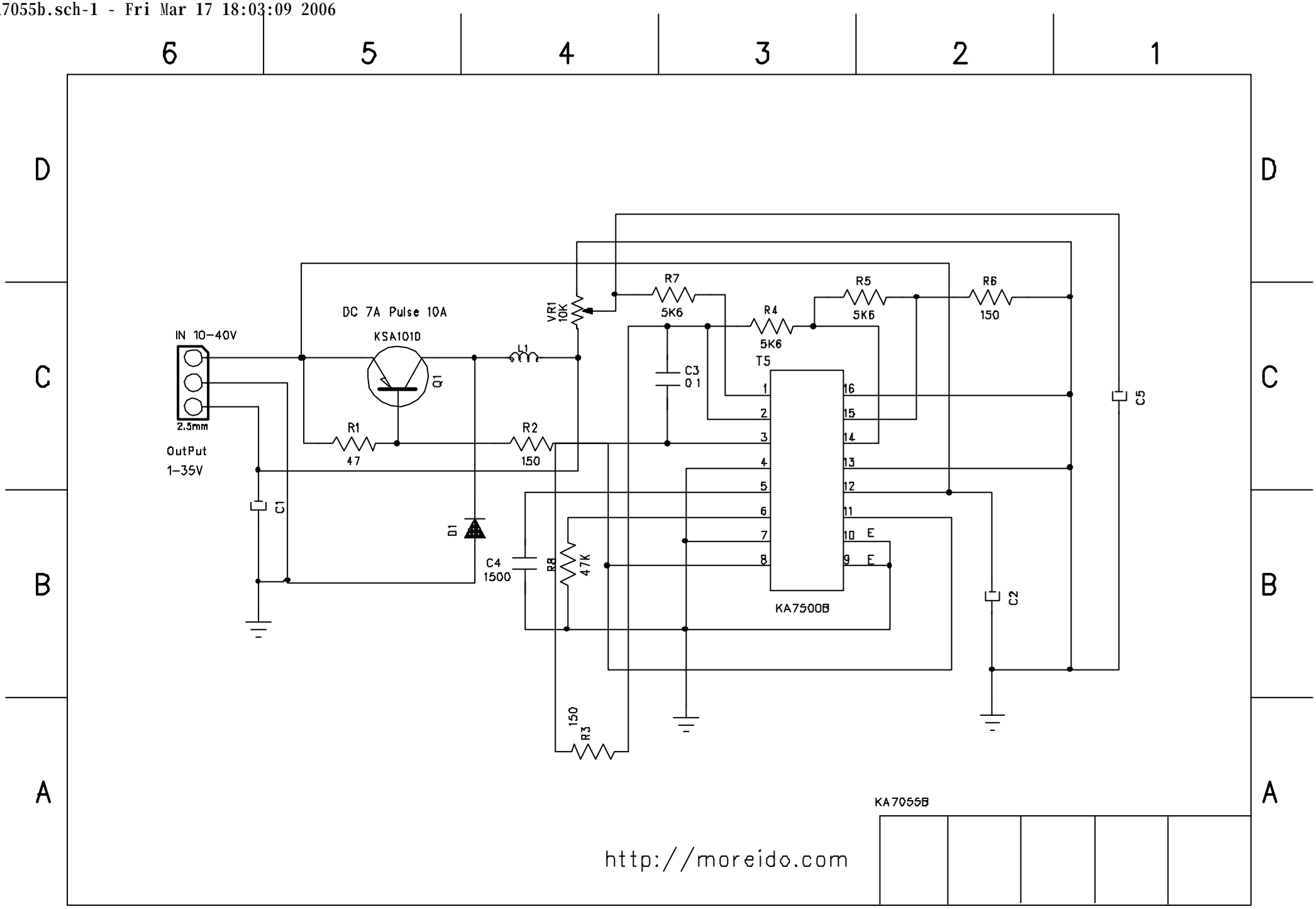

A 4 (297x210)